NERO INDUSTRIES

Advanced Reliability

CBRN CV-90 FILTER

MARS
FILTRATION AND DETECTION SYSTEMS

NERO INDUSTRIES

CBRN CV90 FILTER

CV90 FILTER

Nero Defense CBRN Composite Filter at NATO standard AEP54 provides protection against many toxic industrial chemicals as well as known chemical and biological warfare agents designed to comply with the performance specifications outlined in detail.
Double-stage filtration systems are used in CBRN filtration systems.
Hepa Filter; Filters particles larger than 0.1 micron. 99.997% filtration is provided by using activated carbon.
It has been tested and approved in the internationally valid TNO laboratory.Out of CBRN attack usage, peace filter is provided in order to extend gas filter's lifetime.

SPECIFICATION

- Activated carbon filter is packaged for long-term storage.
- Only HEPA variants are available for peacetime operations where high level of particle filtration is required to reduce comsumable costs significantly.
- It has an unlimited lifetime training filter and this minimizes life cycle costs.
- This filter is CV90 compatible.
- Air Flow: Should be adjusted according to 170 m³ / h
- Dimensions(LxD): 369±5x325±5 mm
- Particulate filter efficiency: % 99,997
- Shelf life is 10 years if stored between 20°C and 40°C.

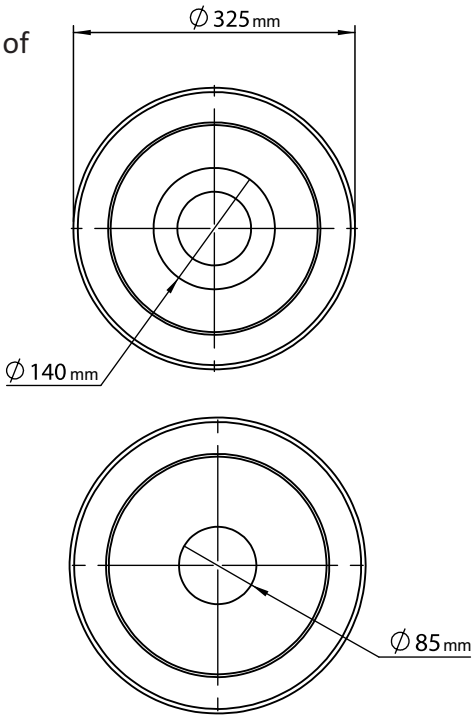

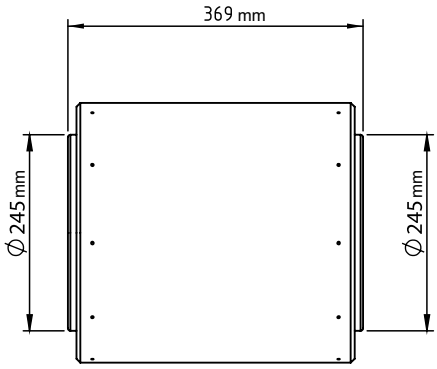

MARS FILTRATION AND DETECTION SYSTEMS